INSTALLATION INSTRUCTIONS

Westfield Widespread Faucets

Part #: 6870-****, 6872-****

JACLO®

Confidence from start to finish.®

Low Profile Spout

High Profile Spout

HANDLE STYLES

T678

T676

T674

T675

T679

T692

T667

JACLO INDUSTRIES | 129 Dermody Street Cranford, NJ 07016
P 908.653.4433 | 800.852.3906 **F** 908.653.1717 | 800.852.4133

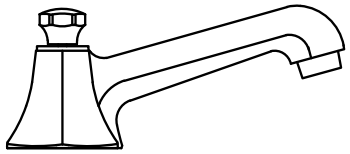

WESTFIELD
LOW PROFILE SPOUT
6870–SPOUT–LL

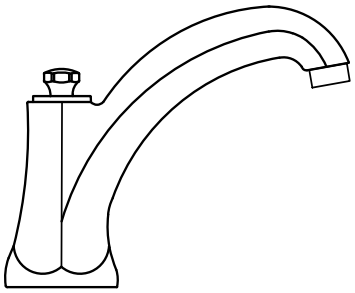

WESTFIELD
HIGH PROFILE SPOUT
6872–SPOUT–LL

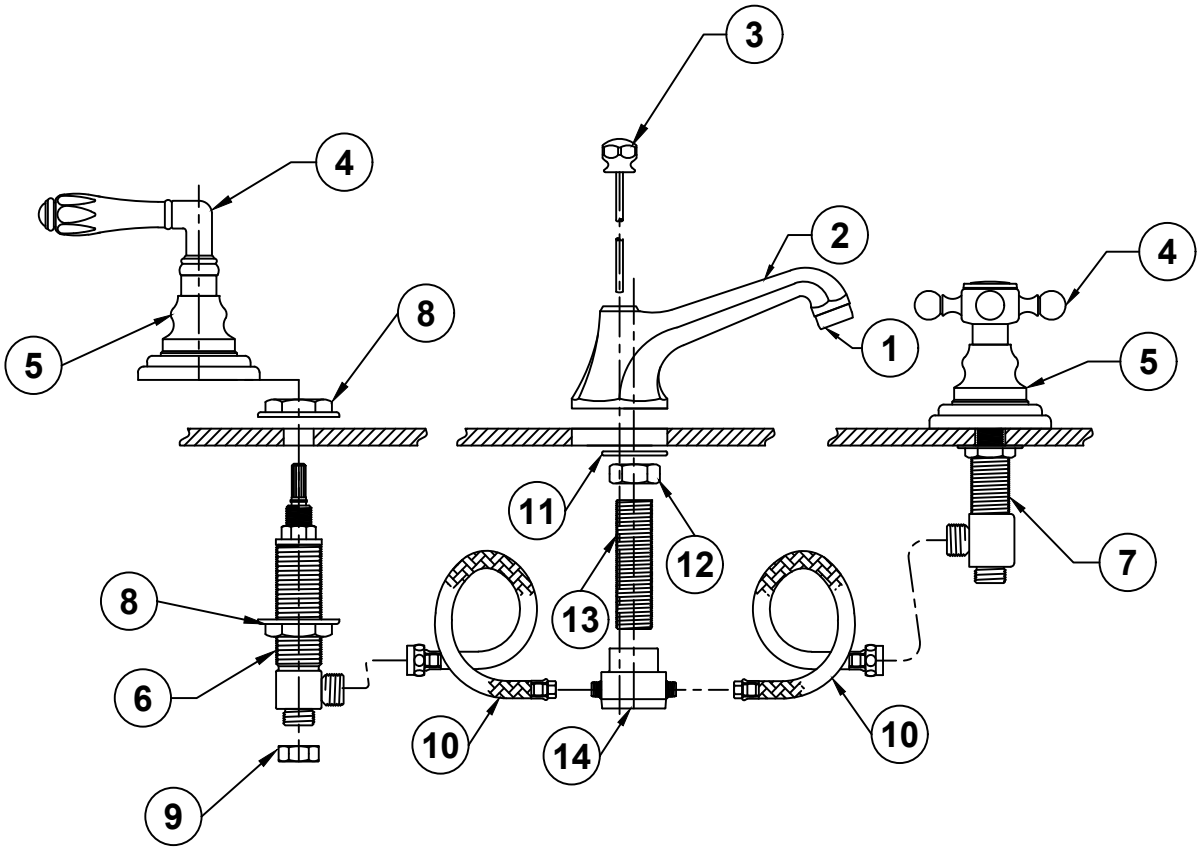

COMPONENT PARTS	
1	**Aerator -** *FCT-AER-***
2	**Spout -** *6870-SPOUT-LL-**/6872-SPOUT-LL-***
3	**Pop-Up Rod Assembly -** *6870-ROD-****
4	**Handle (2) -** *VARIES BY MODEL*
5	**Valve Escutcheon (2) -** *9830-HF-***
6	**Valve Body Hot -** *11832-0*
7	**Valve Body Cold -** *11833-0*
8	**Valve Body Nut (4)**
9	**Nut (2) -** *A438-0*
10	**Hose (2) -** *5130-RGH*
11	**Metal Washer -** *PART OF SPOUT*
12	**Brass Nut -** *PART OF SPOUT*
13	**Brass Nipple -** *PART OF SPOUT*
14	**Brass Tee -** *PART OF SPOUT*

JACLO INDUSTRIES | 129 Dermody Street Cranford, NJ 07016
P 908.653.4433 | 800.852.3906 F 908.653.1717 | 800.852.4133

Spout Installation

(Refer to Figure 1 & 2)

Note: Some items have been pre-assembled at the factory to ensure quality and fit. Some disassembly may be required during installation.

1. Remove tee (14), spout nut (12), and metal spout washer (11) from spout nipple (13).
2. Drop the spout assembly through top of sink basin or countertop.
3. Slide metal washer (11) up from the bottom of sink with pop-up rod cutout facing rear. Thread spout nut (12) and tighten onto sink basin or countertop.
4. Install tee (14) onto nipple (13) using NSF listed joint compound. *Note: tee (14) outlet ports should be at 9 & 3 o'clock position when facing sink
5. Drop pop-up rod (3) through top hole of spout (2).

FIGURE 1

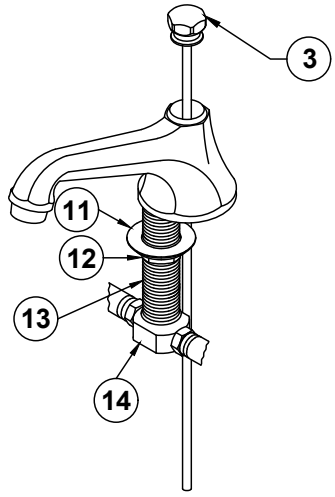

FIGURE 2

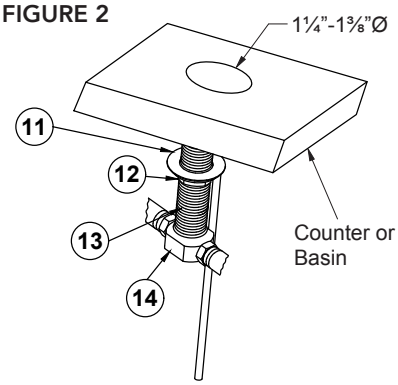

Valve Installation

(Refer to Figure 3, 4, & 5)

1. Identify hot and cold valve. Hot has a red sticker and cold has a blue sticker.
2. Install hot valve on left side of spout as you are facing the sink.
3. Remove handle (4), escutcheon (5), top nut (8), and fiber washer from valve body (6 & 7).
4. Install valve (6 & 7) through bottom of sink basin or countertop, loosening the bottom nut (8).
5. Screw top valve body nut (8) on top of valve body (6 & 7).
6. Using **Figure 5**, adjust height for handle selected using "A" dimension.
7. Screw on escutcheon (5) onto valve body (6 & 7)
8. Place handle (4) on stem, testing on/off position. Tighten handle using handle installation. **Figure 6 (see next page)**
9. Tighten bottom valve nut (8) securely onto bottom of sink basin or countertop.
10. Repeat for cold valve on right side.

FIGURE 3

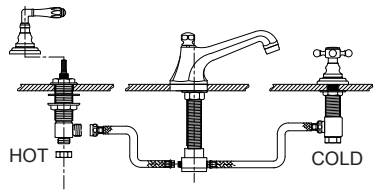

FIGURE 4

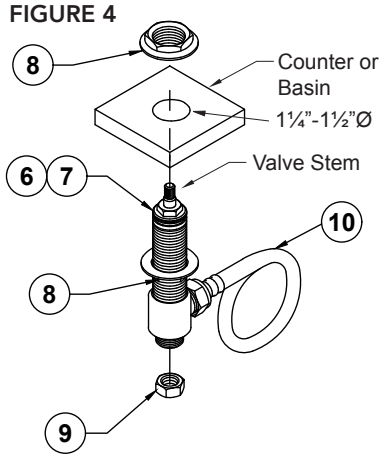

Hose Installation

1. Connect hose (10) to hot valve body outlet and tee (14). 3/8" end to tee (14) and 1/2" end to side port of valve body (6 & 7).

FIGURE 5

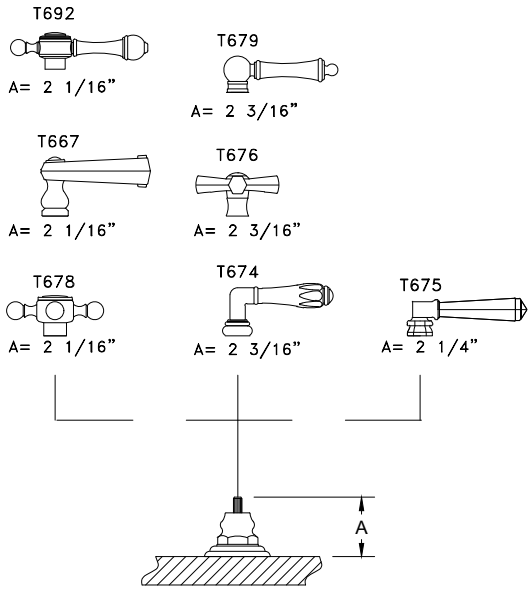

Handle Installation

1. Install handle onto stem in desired "off" position.
2. Confirm handle is not binding with escutcheon. Adjust if necessary.
3. Handles are fastened with a set screw or top screw.
4. If set screw type: screw, tighten then press in decorative cap with o-ring.
5. If top screw type: screw, tighten then press in decorative cap with o-ring.

FIGURE 6

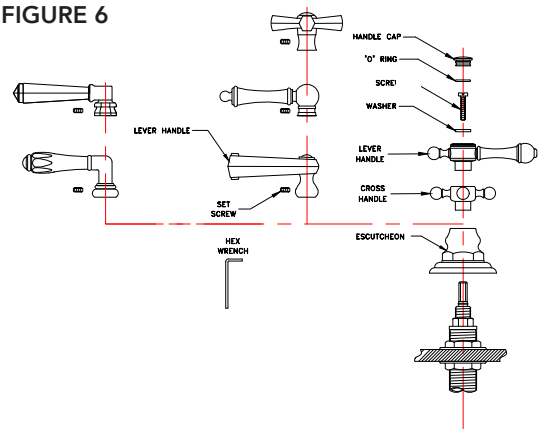

Drain Assembly

1. Disassemble top flange (2) and drain stopper (1) from pop-up drain body (6).
2. Loosen mounting nut (5) for desired height. *Note: This may vary depending on thickness of sink basin or countertop.*
3. Apply appropiate silicon/putty under lip of top flange (2).
4. From underneath, insert drain body (6) through sink basin or countertop and attach top flange (2).
5. Guide sink gasket (3) & plastic washer (4) up snug to bottom of sink basin or countertop.
6. Test the length needed for drain stopper (1) by adjusting height of eyelet so it is visible from side port of ball rod.
7. Align top flange (2) & drain body (6) & tighten nut (5) securely.
8. Test alignment using ball rod (10) without ball rod seats (8) to ensure it goes through eyelet of drain stopper (1).
9. Adjust length of drain stopper (1) (if required) by loosening the nut & eyelet to desired height. Then secure back up to bottom of drain stopper (1).
10. Put one ball rod seat (8) before ball in ball rod (10) concave side toward ball. Push through side port making sure the ball rod (10) goes through drain stopper (1) eyelet. Put second seat (8) on to other side of ball rod (10) & attach ball rod nut (9). Do not over tighten.
11. Pushing ball rod (10) down to raise drain stopper (1) in sink. Test & adjust if necessary.
12. Attach lift rod strap (11) to pop-up rod.
13. Push down on ball rod (10) putting one end of spring clip (12) on, then put through appropiate hole in lift rod strap (11). Attach other end of spring clip (12) & test.
14. Attach tailpiece (7) to drain body (6) using pipe thread sealing tape on threads.

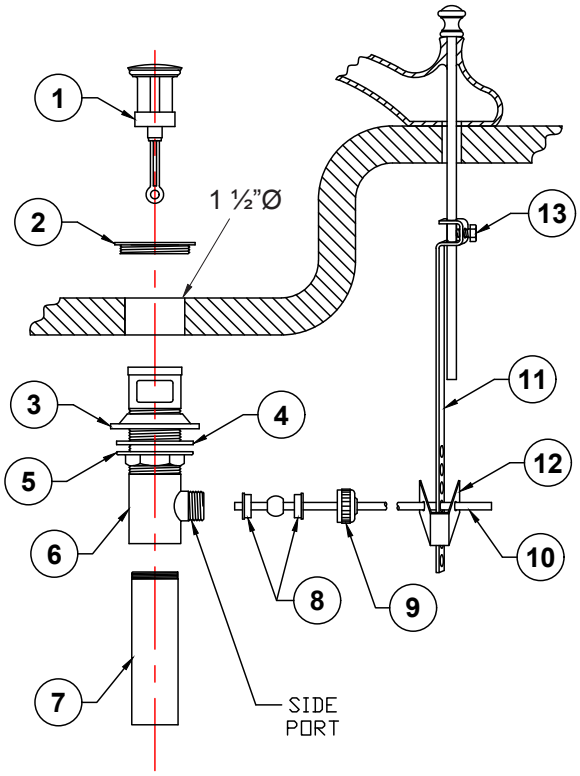

COMPONENT PARTS	
1	Drain Stopper
2	Top Flange
3	Sink Gasket
4	Plastic Washer
5	Mounting Nut
6	Drain Body
7	Tailpiece
8	Ball Rod Seat
9	Ball Rod Nut
10	Ball Rod
11	Lift Rod Strap
12	Spring Clip
13	Lift Rod Strap Screw

JACLO INDUSTRIES | 129 Dermody Street Cranford, NJ 07016
P 908.653.4433 | 800.852.3906 F 908.653.1717 | 800.852.4133

To learn more about JACLO's warranty, please visit **jaclo.com**