INSTALLATION INSTRUCTIONS

Roaring 20's Widespread Faucet

Part #: 7830-****

JACLO®

Confidence from start to finish.®

HANDLE STYLES

T678

T676

T674

T675

T679

T692

T667

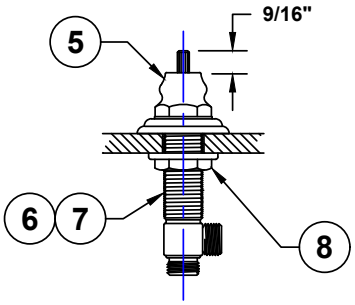

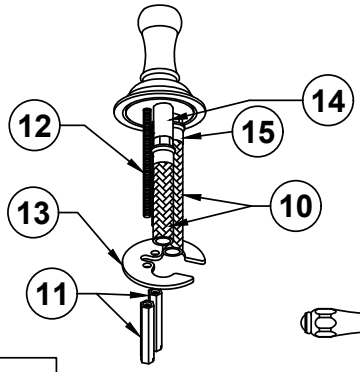

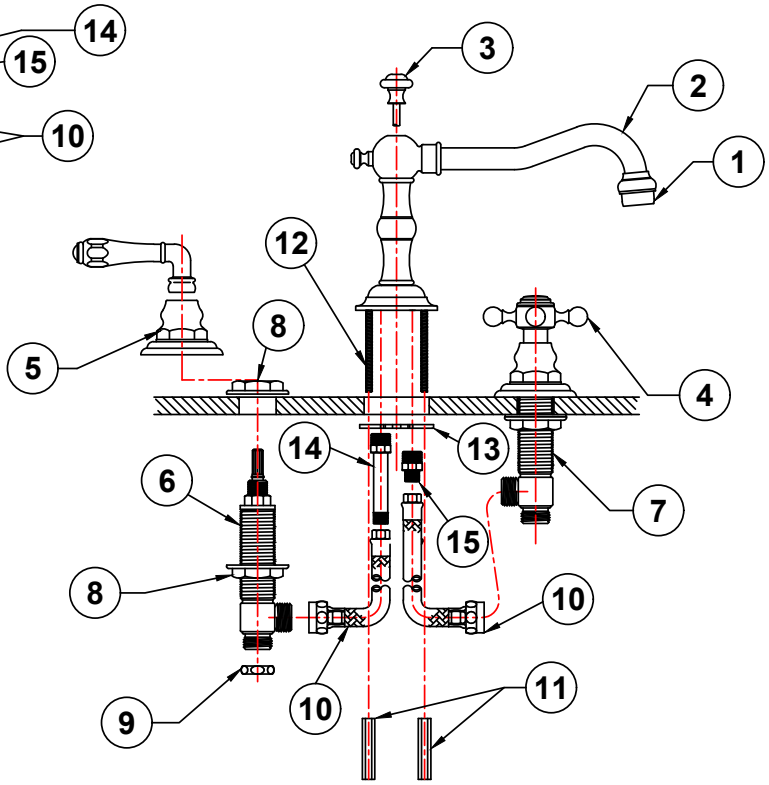

COMPONENT PARTS	
1	**Aerator -** *FCT-AER-***
2	**Spout -** *9830-SPOUT-***
3	**Pop Up Rod Assembly -** *9830-ROD-***
4	**Handle (2) -** *VARIES ON MODEL*
5	**Valve Escutcheon (2) -** *9830-HF-***
6	**Valve Body Hot -** *11832-0*
7	**Valve Body Cold -** *11833-0*
8	**Valve Body Nut (4)**
9	**Nut (2) -** *A438-0*
10	**Hose (2) -** *5130-RGH*
11	**Long Hex Nut (2) -** *PART OF SPOUT*
12	**Threaded Rod (2) -** *PART OF SPOUT*
13	**Stainless Steel Washer -** *PART OF SPOUT*
14	**Hot Hose Fitting -** *30823-RGH*
15	**Cold Hose Fitting -** *30822-RGH*

JACLO INDUSTRIES | 129 Dermody Street Cranford, NJ 07016
P 908.653.4433 | 800.852.3906 **F** 908.653.1717 | 800.852.4133

Spout Installation

(Refer to Figure 1 & 2)

Note: Some items have been pre-assembled at the factory to ensure quality and fit. Some disassembly may be required during installation.

1. Remove long hex nuts (11) from threaded rods (12) and metal spout washer (13).
2. Attach hose (10) to hot & cold hose fitting (14 &15).
3. Drop spout assembly (2) through sink basin or countertop.
4. Slip metal spout washer (13) up from the bottom aligning holes with threaded rod.
5. Hand tighten hex nuts (11) onto threaded rod (12).
6. Drop pop-up rod (3) through top hole of spout (2).
   (*Position adjustment may be necessary)*
7. Tighten hex nuts (11) securely onto threaded rod.

FIGURE 1

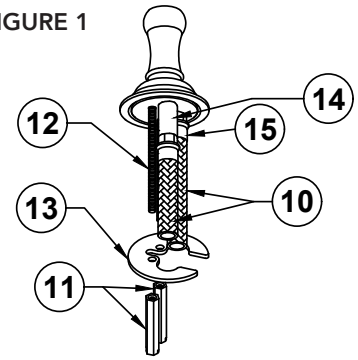

FIGURE 2

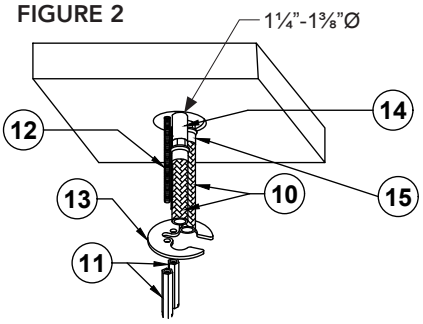

Valve Installation

(Refer to Figure 3, 4, & 5)

1. Identify hot and cold valve. Hot has a red sticker and cold has a blue sticker.
2. Install hot valve on left side of spout as you are facing the sink.
3. Remove handle (4), escutcheon (5), top nut (8), and fiber washer from valve body (6 & 7).
4. Install valve (6 & 7) through bottom of sink basin or countertop, loosening the bottom nut (8).
5. Screw top valve body nut (8) on top of valve body (6 & 7).
6. Using **Figure 5**, adjust height for handle selected using "A" dimension.
7. Screw on escutcheon (5) onto valve body (6 & 7)
8. Place handle (4) on stem, testing on/off position. Tighten handle using handle installation. **Figure 6 (see next page)**
9. Tighten bottom valve nut (8) securely onto bottom of sink basin or countertop.
10. Repeat for cold valve on right side.

FIGURE 3

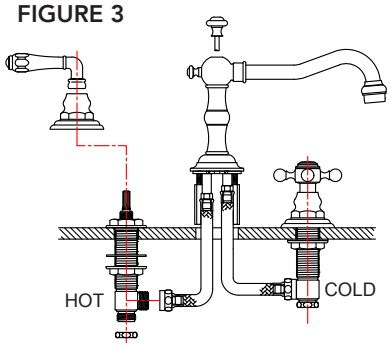

FIGURE 4

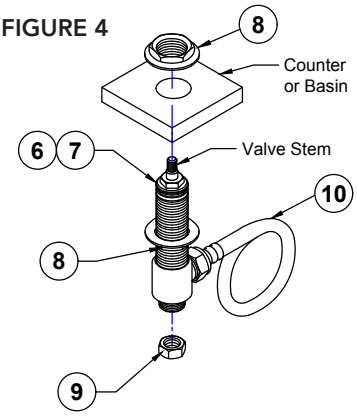

Hose Installation

1. Connect hose (10) (already installed on spout) to valve bodies (6 & 7) and tighten nut accordingly.

FIGURE 5

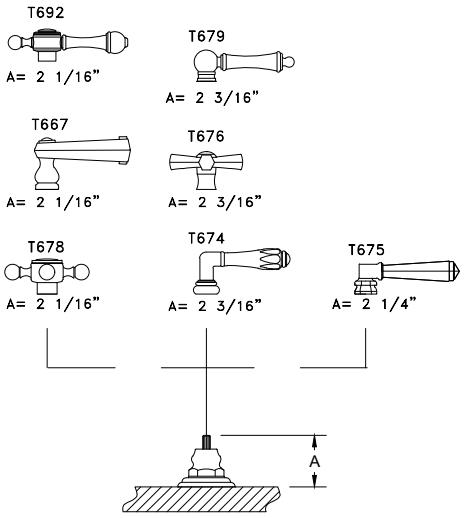

Handle Installation

1. Install handle onto stem in desired "off" position.
2. Confirm handle is not binding with escutcheon. Adjust valve nuts and escutcheon if necessary.
3. Handles are fastened with a set screw or top screw.
4. If set screw type: install washer and screw, tighten then press in decorative cap with o-ring.
5. If top screw type: install washer and screw, tighten then press in decorative cap with o-ring.

FIGURE 6

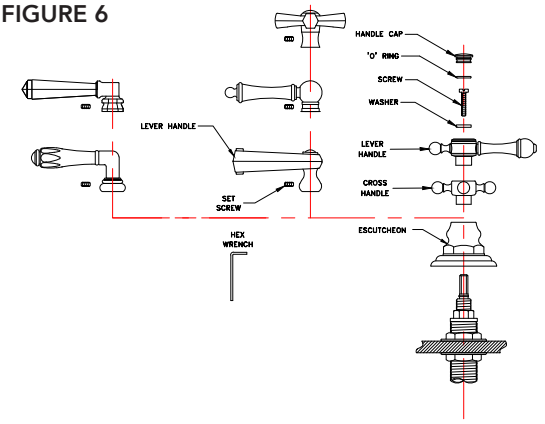

Drain Assembly

1. Disassemble top flange (2) and drain stopper (1) from pop-up drain body (6).
2. Loosen mounting nut (5) for desired height. *Note: This may vary depending on thickness of sink basin or countertop.*
3. Apply appropiate silicon/putty under lip of top flange (2).
4. From underneath, insert drain body (6) through sink basin or countertop and attach top flange (2).
5. Guide sink gasket (3) & plastic washer (4) up snug to bottom of sink basin or countertop.
6. Test the length needed for drain stopper (1) by adjusting height of eyelet so it is visible from side port of ball rod.
7. Align top flange (2) & drain body (6) & tighten nut (5) securely.
8. Test alignment using ball rod (10) without ball rod seats (8) to ensure it goes through eyelet of drain stopper (1).
9. Adjust length of drain stopper (1) (if required) by loosening the nut & eyelet to desired height. Then secure back up to bottom of drain stopper (1).
10. Put one ball rod seat (8) before ball in ball rod (10) concave side toward ball. Push through side port making sure the ball rod (10) goes through drain stopper (1) eyelet. Put second seat (8) on+to other side of ball rod (10) & attach ball rod nut (9). Do not over tighten.
11. Pushing ball rod (10) down to raise drain stopper (1) in sink. Test & adjust if necessary.
12. Attach lift rod strap (11) to pop-up rod.
13. Push down on ball rod (10) putting one end of spring clip (12) on, then put through appropiate hole in lift rod strap (11). Attach other end of spring clip (12) & test.
14. Attach tailpiece (7) to drain body (6) using pipe thread sealing tape on threads.

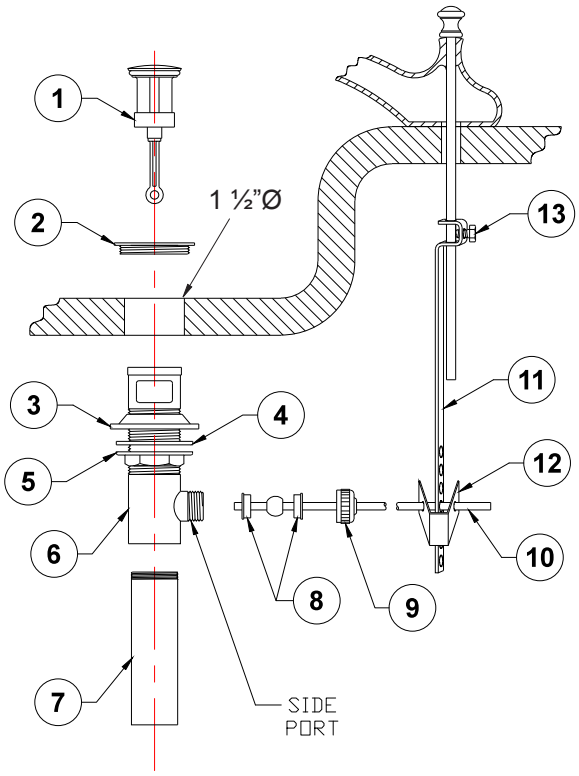

COMPONENT PARTS	
1	Drain Stopper
2	Top Flange
3	Sink Gasket
4	Plastic Washer
5	Mounting Nut
6	Drain Body
7	Tailpiece
8	Ball Rod Seat
9	Ball Rod Nut
10	Ball Rod
11	Lift Rod Strap
12	Spring Clip
13	Lift Rod Strap Screw

JACLO INDUSTRIES | 129 Dermody Street Cranford, NJ 07016
P 908.653.4433 | 800.852.3906 F 908.653.1717 | 800.852.4133

To learn more about JACLO's warranty, please visit **jaclo.com**