INSTALLATION INSTRUCTIONS

Contempo Single Lever Wall Faucet Trims

Part #'s: *8110-L-TRIM, 8220-L-TRIM*

JACLO®

Confidence from start to finish.®

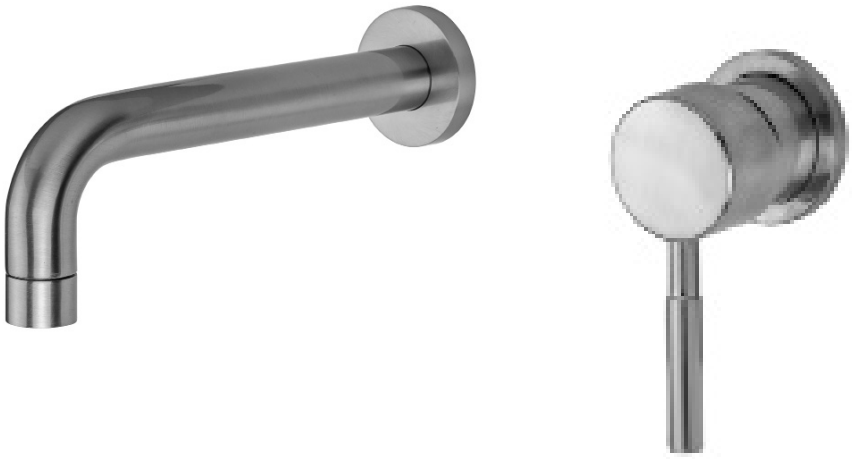

8110-L-TRIM

8220-L-TRIM

JACLO INDUSTRIES | 129 Dermody Street Cranford, NJ 07016
P 908.653.4433 **F** 908.653.1717

PRE-INSTALL NOTES

This wall faucet can be installed with the spout and valve in any location. Installer must provide 1/2" street elbows (if used) and piping from valve to spout.

*NOTE: NO EXTENSION AVAILABLE

ROUGH VALVE (6660-RGH)

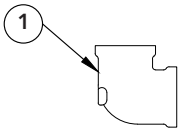

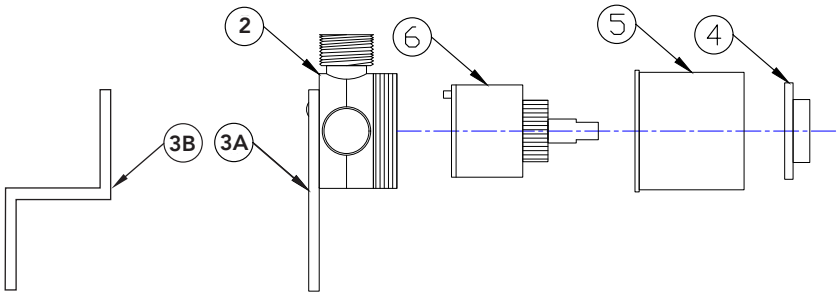

VALVE COMPONENTS	
1	Drop Ell (Spout Rough Assembly)
2	Valve Body
3	Mounting Bracket/Straight + Step provided
4	Cartridge Lock Nut (Retain for trim install)
5	Rough-in Collar
6	Cartridge

VALVE ROUGH INSTALLATION

1. Determine location of spout and valve.
2. Build blocking for valve (2) to finished wall as per **Figure 1**. Front brass is 3/4" from finished wall (critical). (No extension available)
3. If using flat brass mount (**Figure 3A**), distance from cross beam to finish wall is 1 3/4" - 2 1/2". If using step mount (**Figure 3B**), distance from crossbeam to finished wall is 2 3/4 - 3 1/4". **Note: If using the step mount for valve and putting the spout on same cross beam, it will be 1" shorter.**
4. Attach spout and valve rough assembly to blocking with suitable fasterners. **Figure 2**
5. Remove cartridge lock nut (4) and cartridge (6). (DO NOT DISREGARD)
6. Plumb mixing valve attaching hot and cold water lines to inlets on valve. **Figure 3**
7. Reinstall cartridge (6) and cartridge locknut (4), put in off position, and turn on water supplies and check for leaks.

JACLO INDUSTRIES | 129 Dermody Street Cranford, NJ 07016
P 908.653.4433 **F** 908.653.1717

SPOUT ROUGH INSTALLATION

1. Build blocking for drop ell (1) so that it is 1" behind finished wall and secure with suitable fasteners.
2. Pipe from valve to drop ell location.

FAUCET TRIM (8110-L-TRIM OR 8220-L-TRIM)

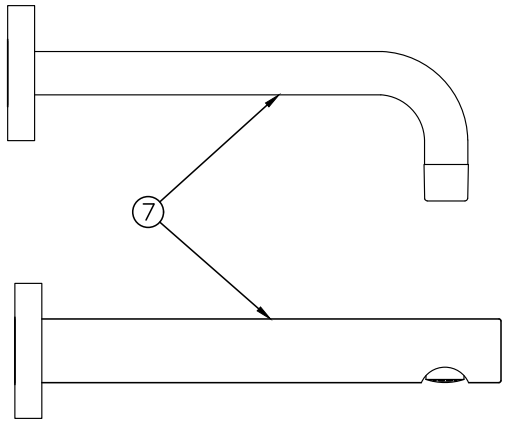

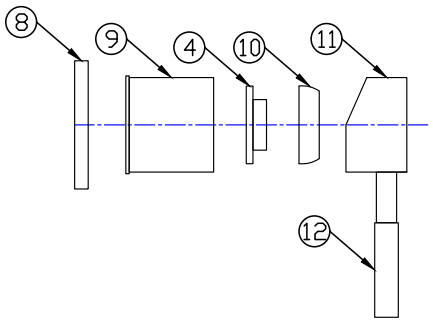

TRIM COMPONENTS	
7	Spout & Flange - *A-428 OR 8110-WALL-SPOUT*
8	Valve Escutcheon - *A257-RING*
9	Collar - *A257-COL*
10	Cap (Requires Cartridge Lock Nut from Rough) - *A257-CAP*
6	Cartridge - *6660-CART-RGH*
11	Handle
12	Handle Lever

TRIM INSTALLATION

1. Turn off water supplies.
2. Unscrew cartridge lock nut (6) from valve body (2) and screw into back of the cap (10)
3. Unscrew brass rough-in collar (5) and discard. Cartridge will come off.
4. Attach cap (10) to finished collar (9).
5. Re-install cartridge (6) making sure o-ring is intact, and nibs on back of cartridge align with detents in valve.
6. Install collar/cap over cartridge and onto valve body (2). *HINT - hold cartridge in place with one finger while screwing the cap on*
7. Slip valve escutcheon over collar flush with wall.
8. Unscrew lever (12) from handle (11) and place on safe/clean surface.
9. Attach handle (11) to cartridge (6) with set-screw.
10. Re-attach lever (12) onto handle (11)

JACLO INDUSTRIES | 129 Dermody Street Cranford, NJ 07016
P 908.653.4433 **F** 908.653.1717

FIG. 1

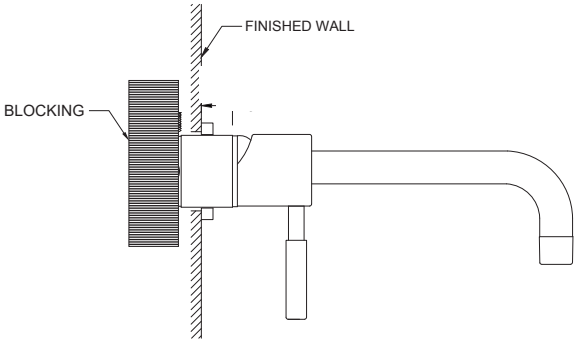

FIG. 2

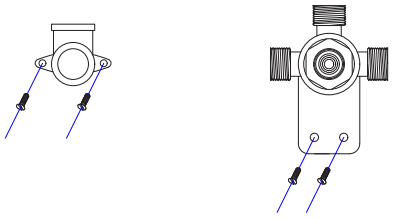

FIG. 3

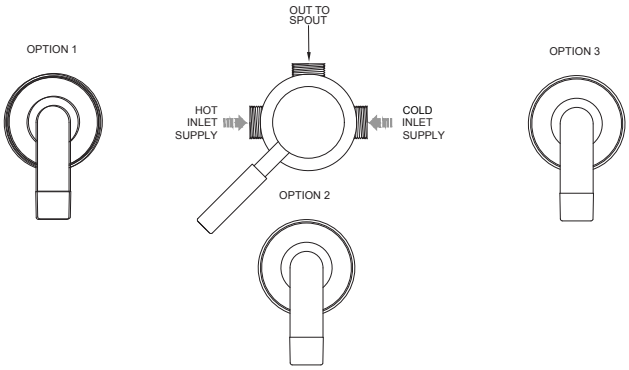

FIG. 4

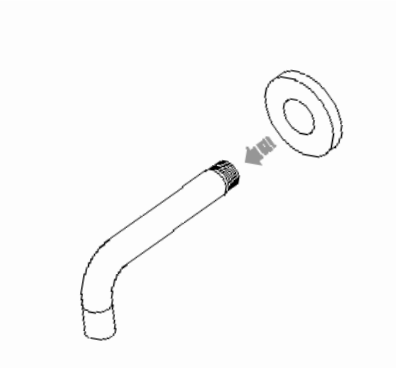

FIG. 5

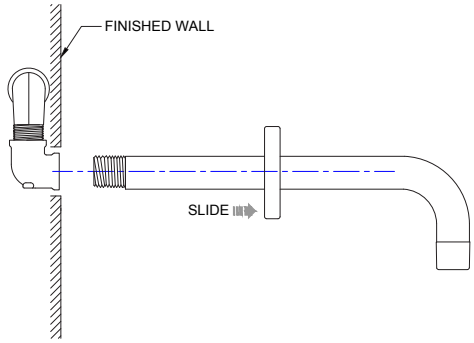

FIG. 6

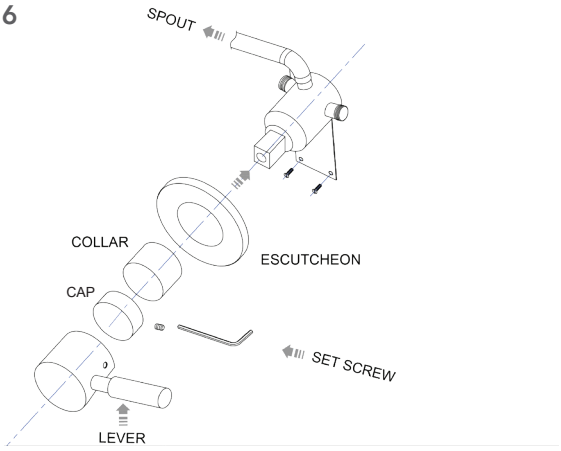

FIG. 7

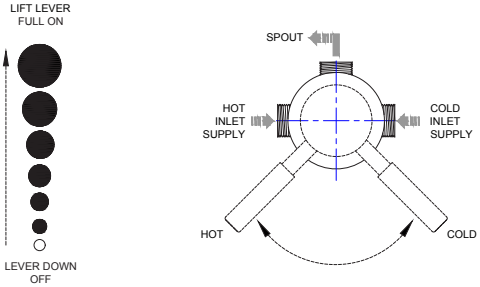

JACLO INDUSTRIES | 129 Dermody Street Cranford, NJ 07016
P 908.653.4433 F 908.653.1717

ROUGH VALVE SPECIFICATIONS

FRONT VIEW

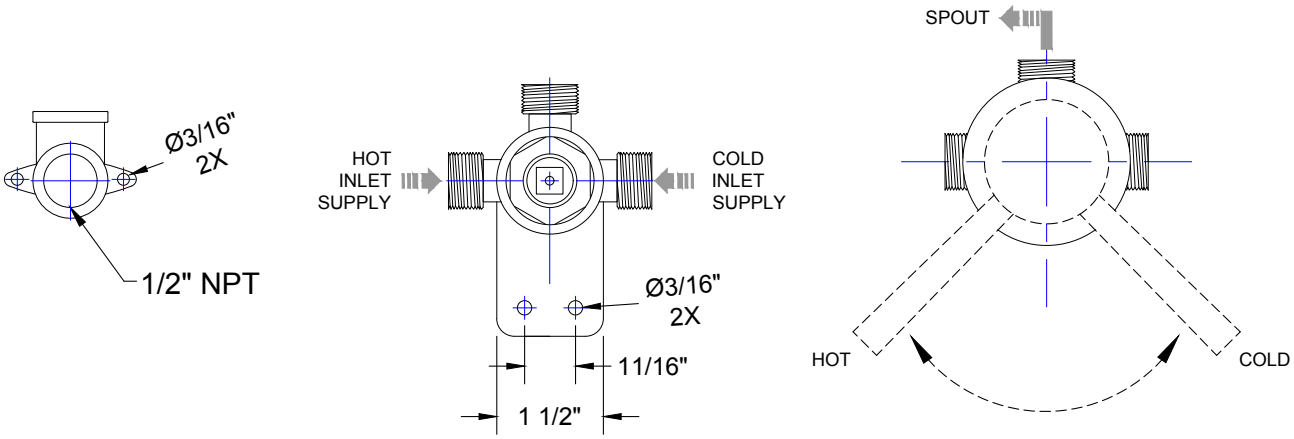

TOP VIEW

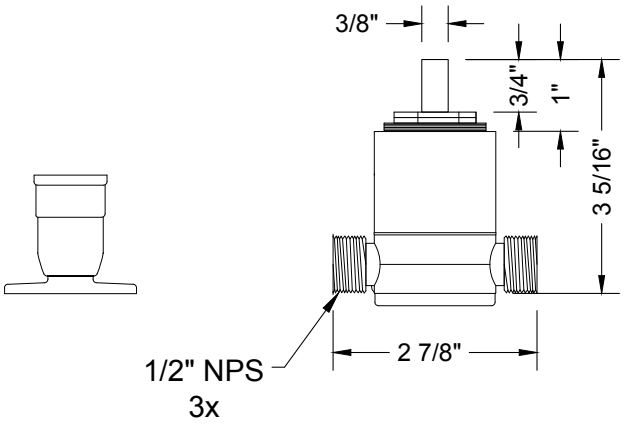

JACLO INDUSTRIES | 129 Dermody Street Cranford, NJ 07016
P 908.653.4433 **F** 908.653.1717

To learn more about JACLO's warranty, please visit **jaclo.com**