INSTALLATION INSTRUCTIONS

Uptown Contempo Widespread Faucets
Part #'s: 8880-****, 8881-****

JACLO®
Confidence from start to finish.®

8880

8881

Handle Options

Handle Options

JACLO INDUSTRIES | 129 Dermody Street Cranford, NJ 07016
P 908.653.4433 | 800.852.3906 **F** 908.653.1717 | 800.852.4133

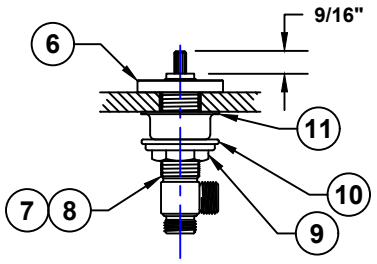

COMPONENT PARTS	
1	**Hidden Aerator -** *9880-AER*
2	**8880 Low Profile Spout -** *8880-SPOUT-LL-** / 8881-SPOUT-LL-**
3	**Lift Rod -** *9880-ROD-**
4	**Round or Square Spout Escutcheon -** *VARIES ON MODEL*
5	**Handles -** *VARIES ON MODEL*
6	**Round or Square Valve Escutcheon -** *VARIES ON MODEL*
7	**Valve Body Cold -** *11833-0 OR 11835-0 (FOR L & C HANDLE ONLY)*
8	**Valve Body Hot -** *11832-0 OR 11834-0 (FOR L & C HANDLE ONLY)*
9	**Valve Body Nut (2)**
10	**Fiber Washer (2)**
11	**Valve Cup Washer -** *VALVE CUP WASHER*
12	**Cock Nut -** *A438-0*
13	**Hose (2) -** *5130-0*
14	**Washer -** *PART OF SPOUT*
15	**Brass Nut -** *PART OF SPOUT*
16	**Brass Nipple -** *PART OF SPOUT*
17	**Brass Tee -** *PART OF SPOUT*
18	**Hot Hose Fitting -** *30823-RGH*
19	**Cold Hose Fitting -** *30822-RGH*

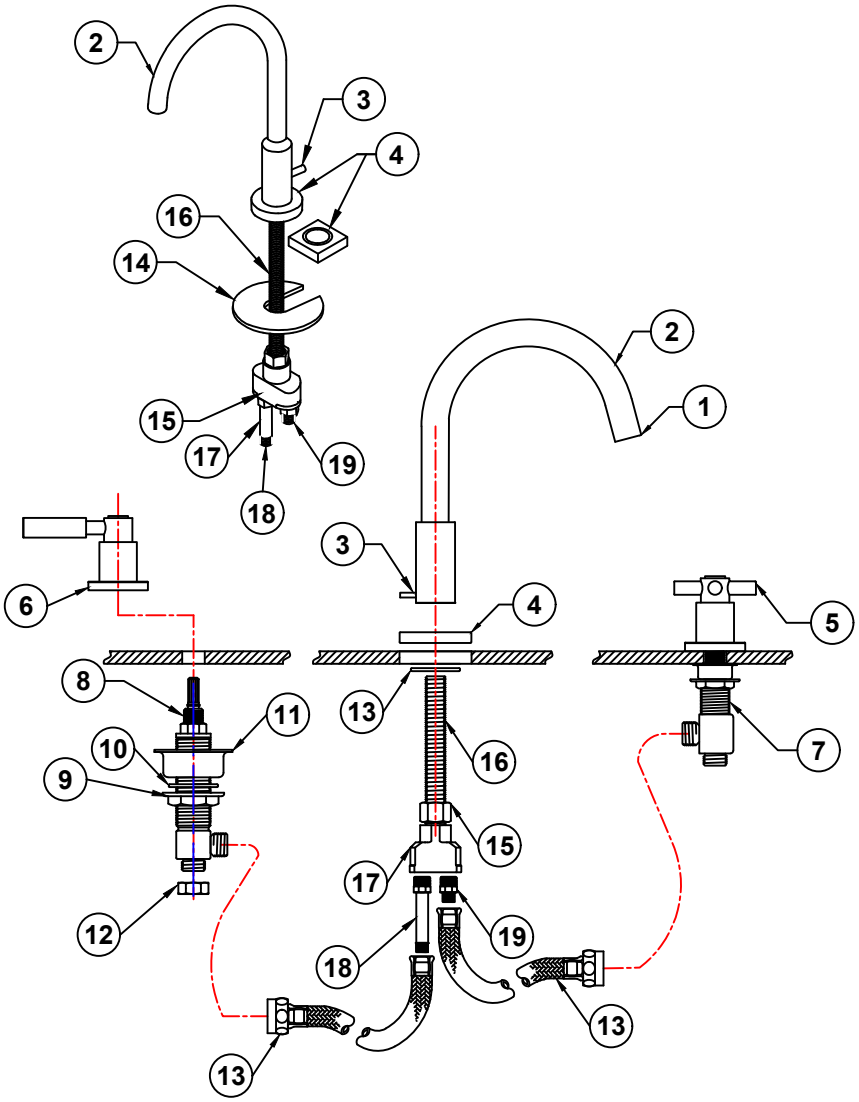

JACLO INDUSTRIES | 129 Dermody Street Cranford, NJ 07016
P 908.653.4433 | 800.852.3906 F 908.653.1717 | 800.852.4133

Spout Installation
(Refer to Figure 1 & 2)

Note: Some items have been pre-assembled at the factory to ensure quality and fit. Some disassembly may be required during installation.

1. Loosen brass spout nut (15) slip off metal spout washer (14).
2. Slip spout assembly through sink basin or countertop from bottom.
3. Align pop up rod assembly hole in rear of spout escutcheon with channel in spout.
4. But metal spout washer (14) up to bottom of sink basin or countertop opening to rear to accommodate pop up rod assembly (3) above brass spout nut (15).
5. Tighten brass spout nut (15).
6. Attach 3/8" end of hose (13) to hose fitting (18 & 19) on tee (17) starting with long fitting first and tighten nut.
7. Push pop up rod assembly (3) through spout escutcheon to sit in channel.

FIGURE 1

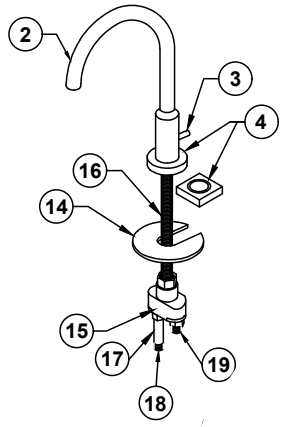

DO NOT TRY TO REMOVE TEE(15) FROM NIPPLE(16)

FIGURE 2

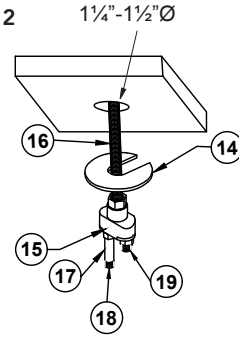

Valve Installation
(Refer to Figure 3, 4, & 5)

1. Identify hot and cold valve. Hot has a red sticker and cold has a blue sticker.
2. Install hot valve on left side of spout as you are facing the sink.
3. Remove handle (5), escutcheon (6), top nut and fiber washer (10) from valve body (7 & 8).
4. Discard top nut and fiber washer.
5. Loosen bottom valve, nut (9), fiber washer (10), and valve cup washer (11) all the way down.
6. Place valve body (7 &8) through deck sink basin or countertop from bottom.
7. Screw on handle escutcheon (6) on to valve body stem.
   *Note: Adjustments may need to be made because of differences in thickness of sink, basin, or countertop.
8. Using **Figure 5** adjust height for handle selected using "A" dimension.
9. Place handle (5) on stem testing on/off position. Tigten handle using handle installation. **Figure 6**
   *Note: Out ports of both hot and cold valve bodies (7 &8) should be facing spout.

FIGURE 3

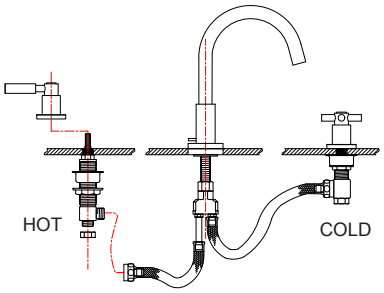

FIGURE 4

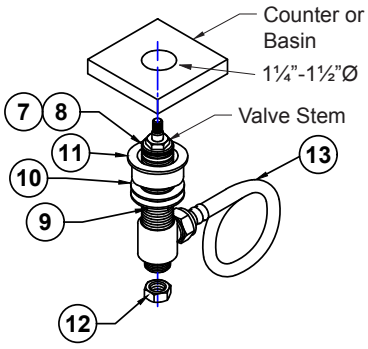

*No top nut used on any of these handles

FIGURE 5

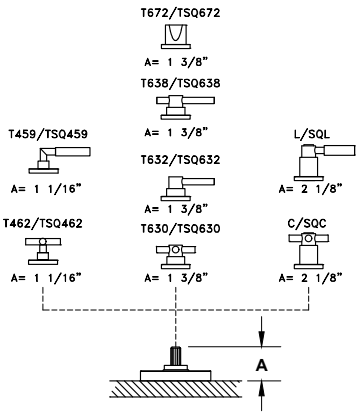

Hose Installation

1. Connect hoses (13) already installed on spout to valve bodies (7 & 8) and tighten nuts accordingly.

Aerator Cleaning
ALWAYS REMOVE AERATOR AND FLUSH THE FAUCET AFTER INITIAL INSTALLATION

1. Use aerator key supplied with faucet
2. Engage key in aerator. **Figure 1**.
3. Remove aerator by turning key counterclockwise
4. Turn on hot and cold water valves flush lines
5. Reinstall aerator by engaging key and turning clockwise until tight
6. Check for leaks, re-tighten if necessary

Aerator Key

FIGURE 6

Handle Installation

1. Install handle onto stem in desired "off" position.
2. Confirm handle is not binding with escutcheon. Adjust if necessary.
3. Handles are fastened with a set screw or top screw. **Figure 7**.
4. If set screw type, screw, tighten then press in decorative cap with o-ring.
5. If top screw type, screw, tighten then press in decorative cap with o-ring.

FIGURE 7

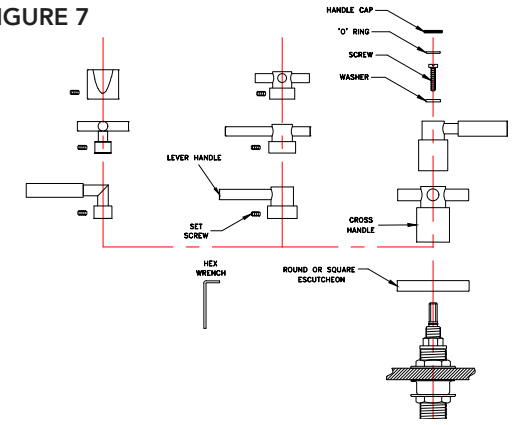

Drain Assembly

1. Disassemble top flange (2) and drain stopper (1) from pop-up drain body (6).
2. Loosen mounting nut (5) for desired height. *Note: This may vary depending on thickness of sink basin or countertop.*
3. Apply appropiate silicon/putty under lip of top flange (2).
4. From underneath, insert drain body (6) through sink basin or countertop and attach top flange (2).
5. Guide sink gasket (3) & plastic washer (4) up snug to bottom of sink basin or countertop.
6. Test the length needed for drain stopper (1) by adjusting height of eyelet so it is visible from side port of ball rod.
7. Align top flange (2) & drain body (6) & tighten nut (5) securely.
8. Test alignment using ball rod (10) without ball rod seats (8) to ensure it goes through eyelet of drain stopper (1).
9. Adjust length of drain stopper (1) (if required) by loosening the nut & eyelet to desired height. Then secure back up to bottom of drain stopper (1).
10. Put one ball rod seat (8) before ball in ball rod (10) concave side toward ball. Push through side port making sure the ball rod (10) goes through drain stopper (1) eyelet. Put second seat (8) on+to other side of ball rod (10) & attach ball rod nut (9). Do not over tighten.
11. Pushing ball rod (10) down to raise drain stopper (1) in sink. Test & adjust if necessary.
12. Attach lift rod strap (11) to pop-up rod.
13. Push down on ball rod (10) putting one end of spring clip (12) on, then put through appropiate hole in lift rod strap (11). Attach other end of spring clip (12) & test.
14. Attach tailpiece (7) to drain body (6) using pipe thread sealing tape on threads.

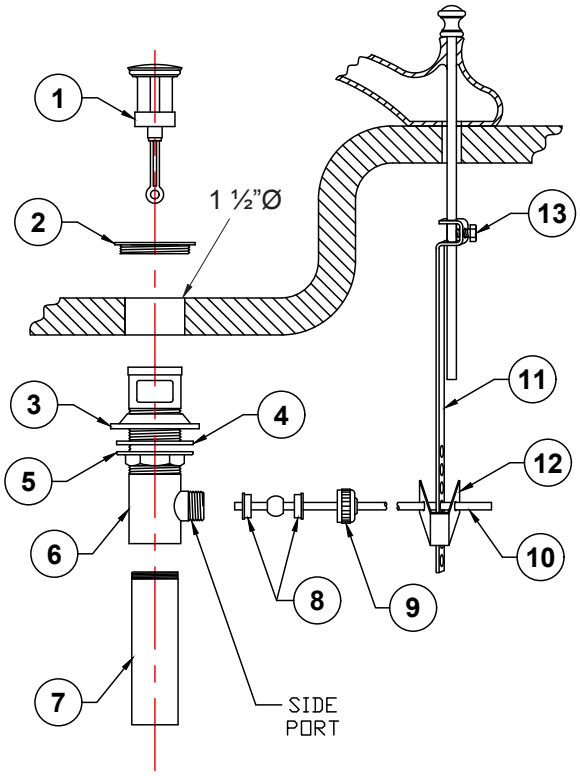

COMPONENT PARTS	
1	Drain Stopper
2	Top Flange
3	Sink Gasket
4	Plastic Washer
5	Mounting Nut
6	Drain Body
7	Tailpiece
8	Ball Rod Seat
9	Ball Rod Nut
10	Ball Rod
11	Lift Rod Strap
12	Spring Clip
13	Lift Rod Strap Screw

JACLO INDUSTRIES | 129 Dermody Street Cranford, NJ 07016
P 908.653.4433 | 800.852.3906 F 908.653.1717 | 800.852.4133

To learn more about JACLO's warranty, please visit **jaclo.com**