INSTALLATION INSTRUCTIONS

Roaring 20's Roman Tub Set
Part #: 9930-

JACLO®
Confidence from start to finish.®

HANDLE STYLES

T678

T676

T674

T675

T679

T692

T667

JACLO INDUSTRIES | 129 Dermody Street Cranford, NJ 07016
P 908.653.4433 | 800.852.3906 **F** 908.653.1717 | 800.852.4133

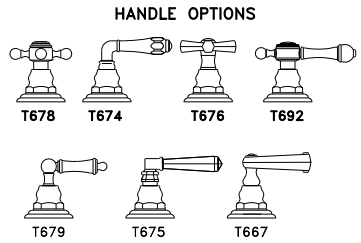

ROARING TWENTIES

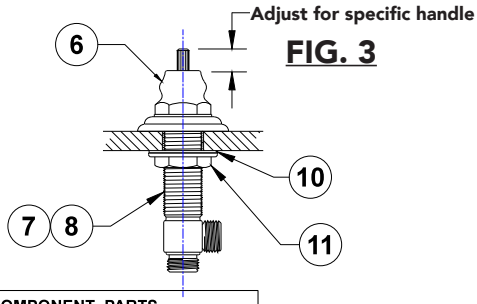

FIG. 3

		COMPONENT PARTS
TRIM	1	Aerator
	2	9930 Roman Tub Filler
	3	Set Screw
	4	Pop–Up Rod
	5	Handle
	6	Valve Escutcheon
ROUGH	7	Valve Body Cold
	8	Valve Body Hot
	9	Cartridge
	10	Fiber Washer (4)
	11	Valve Body Nut (4)
	12	Hose (2)
	13	Quick Connect
	14	Brass Washer
	15	Rubber Washer
	16	Plastic Washer
	17	Brass Nut
	18	Brass Tee

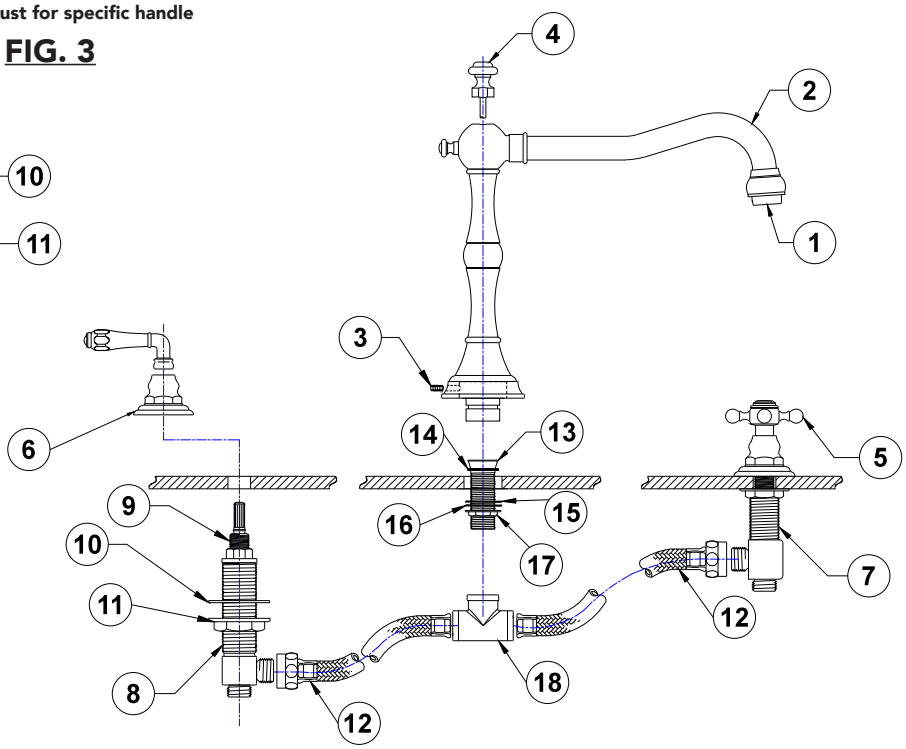

FIG. 2

SPOUT QUICK CONNECT AND VALVE BODY INSTALLATION

1. Confirm hole is in conformance with **Fig. 1**
2. Remove nut **(17)** and washers **(15)(16)** from spout.
3. Drop quick connect **(13)** from top of counter.
4. Install washers **(15)(16)** and nut **(17)** from bottom of counter and tighten.
5. Install "T" **(18)** with suitable pipe sealant.
6. Install hot and cold valve assemblies **(7)(8)** from bottom of counter. Install valve escutcheon **(6) Fig.3** on valve assemblies. Adjust valve assemblies per **Fig. 3**, tighten nut **(11)** on each valve assembly
7. Install spout
8. Install hot and cold hoses **(12)** from "T" to each valve assembly.
9. Connect hot and cold water supply to each valve assembly (bottom of assembly).

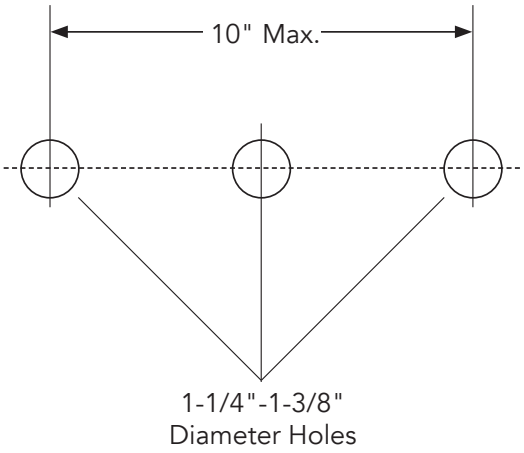

FIG. 1

JACLO INDUSTRIES | 129 Dermody Street Cranford, NJ 07016
P 908.653.4433 | 800.852.3906 F 908.653.1717 | 800.852.4133

INSTALLATION FOR DIVERTER & HANDSHOWER IF USED (NOT INCLUDED)

1. Remove trim and smaller top valve nut **(1)** from valve.
2. Provide 1½" diameter hole in deck. Maximum deck thickness is 2¼" for diverter only. Roman tub spouts and valves may differ and must be checked.
3. Thread bottom valve nut **(2)** all the way down on diverter valve **(5)**.
4. Slide valve (from underneath) through deck.
5. Screw top valve nut **(1)** onto valve until top of stem **(3)** is 2¼" above top of finished deck as shown. This is important as it controls the space between handle and escutcheon. Hand tighten bottom valve nut **(2)**.
6. Apply a small bead of silicone to the bottom of the escutcheon and install onto valve.
7. Install handle. **See Fig. 4**
8. Secure bottom valve nut **(2)**. Connect coupling to diverter, hose to coupling, and backflow preventer to hose
9. Install handshower deck mount sleeve **(7)**. Slide hose through the sleeve. Connect handshower hose to backflow preventer.
10. Connect hot and cold water supply to valve.
    Note: Make sure any solder connections are at least 1½" away from valve body.
11. Connect spout to bottom of diverter valve

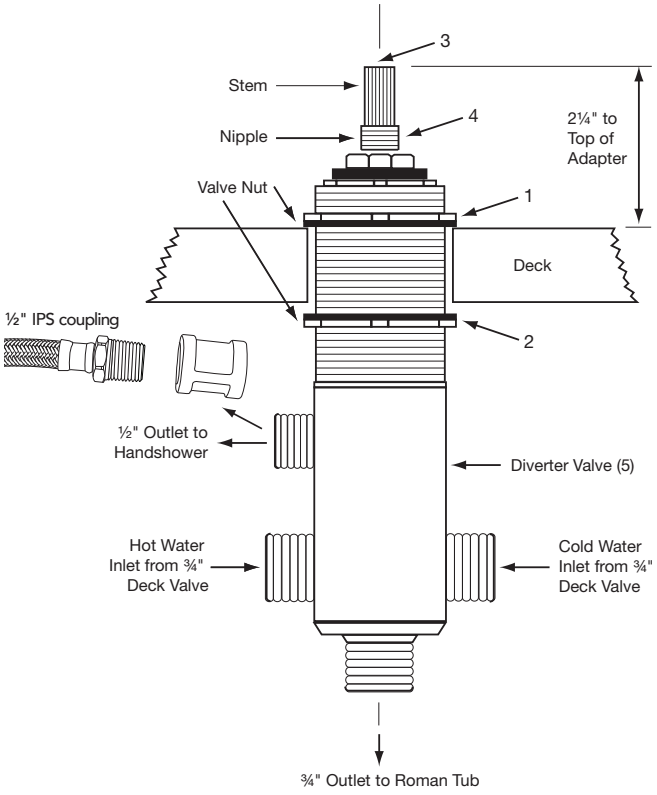

HANDLE INSTALLATION (HANDLES VARY)

1. Handle trim **T678, T676, and T692** install with top screw into top of valve shaft, **Fig.4**
   a. Remove index button and tighten screw.
   b. Replace index button after it is tightened.
2. Handle trim **T674, T679, T675, and T667** install with set screw into side of valve shaft

*** FOR ILLUSTRATION PURPOSES ONLY (STYLES**

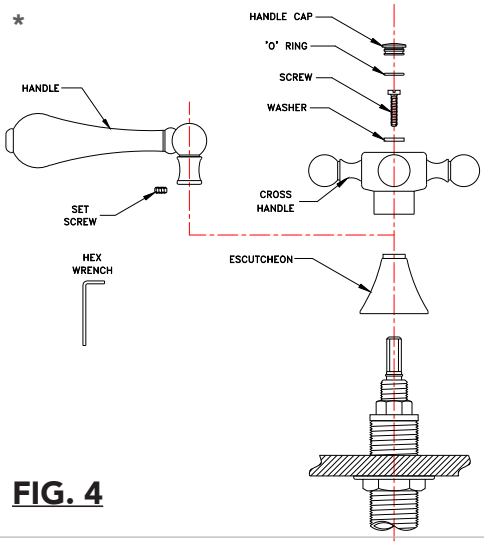

FIG. 4

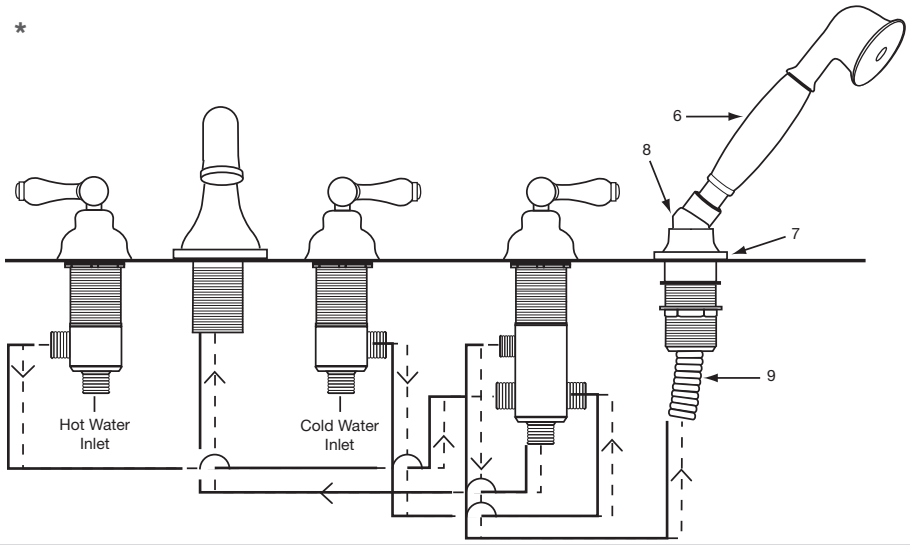

To learn more about JACLO's warranty, please visit **jaclo.com**