INSTALLATION INSTRUCTIONS

Cubix® Widespread Faucet
Part #: 3204, 5204, 3304, 5304

JACLO®
Confidence from start to finish.®

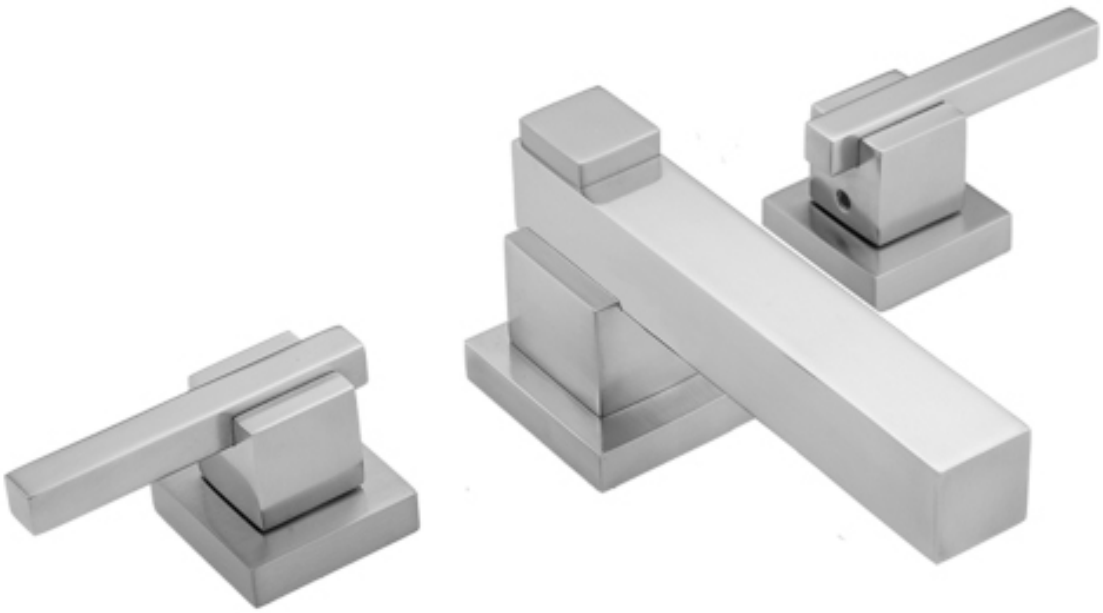

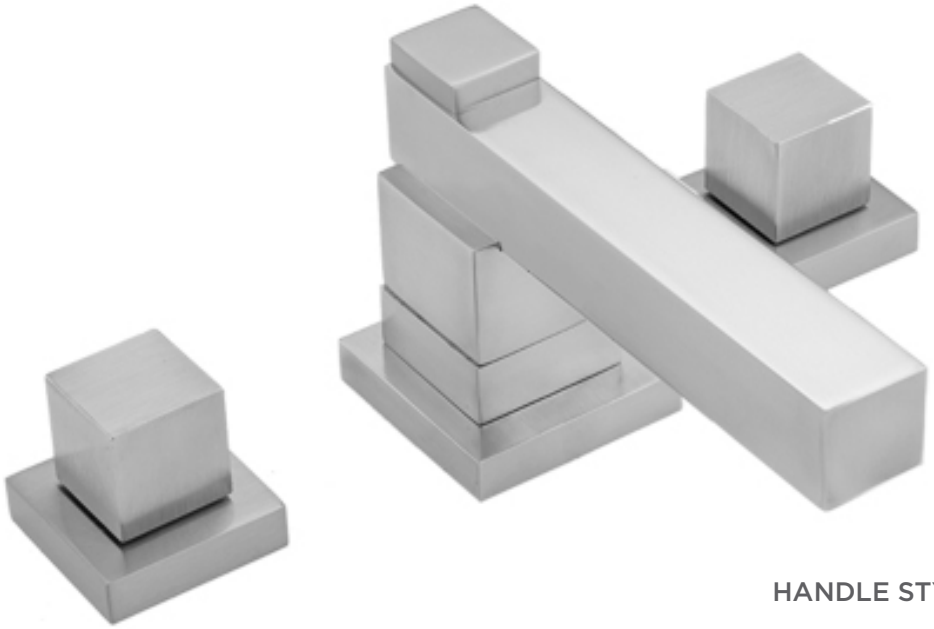

HANDLE STYLES

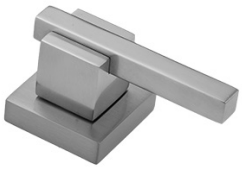

3204

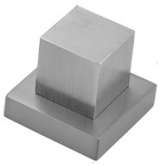

5204

JACLO INDUSTRIES | 129 Dermody Street Cranford, NJ 07016
P 908.653.4433 | 800.852.3906 **F** 908.653.1717 | 800.852.4133

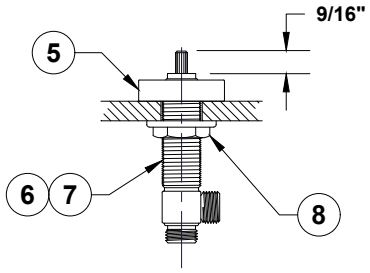

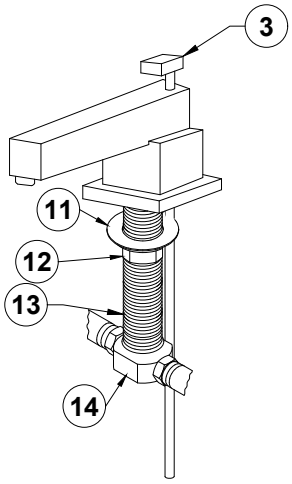

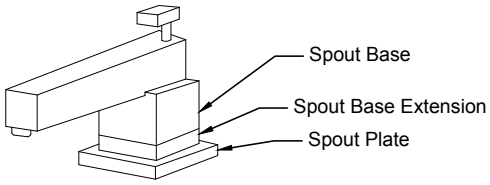

COMPONENT PARTS	
1	**Aerator -** *CU-400-AER*
2	**Spout -** *CU-400-SPOUT-LL-***
3	**Pop Up Rod Assembly -** *CU-400-R-*** / CU-400-K-****
4	**Handle (2) -** *VARIES ON MODEL*
5	**Valve Escutcheon (2) -** *CU-400-ESC-****
6	**Valve Body Hot -** *11832-0*
7	**Valve Body Cold -** *11833-0*
8	**Valve Body Nut (2)**
9	**Cock Nut -** *A438-0*
10	**Hose (2) -** *5130-RGH*
11	**Washer -** *CU-400-WASHER-0*
12	**Brass Nut -** *CU-400-NUT-0*
13	**Brass Nipple -** *0-CU-400-LL-NIPPLE*
14	**Brass Tee -** *CU-400-TEE-0*

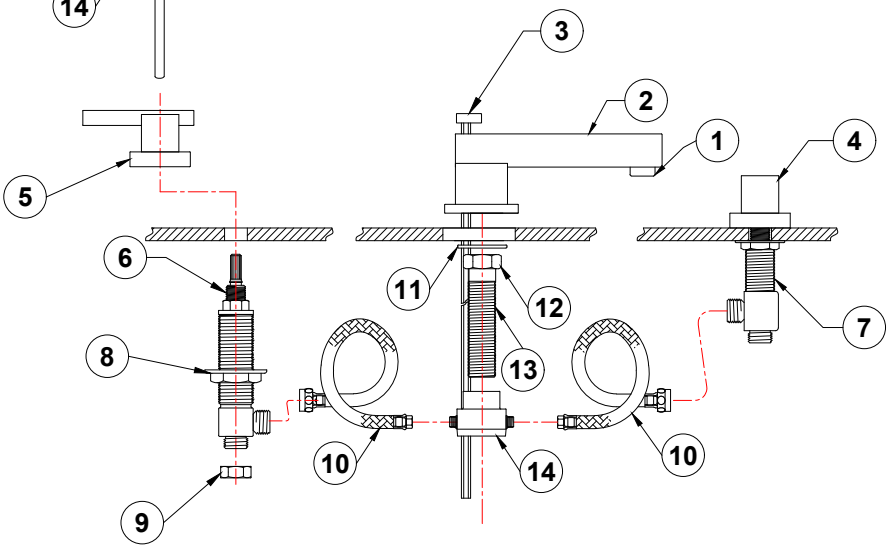

JACLO INDUSTRIES | 129 Dermody Street Cranford, NJ 07016
P 908.653.4433 | 800.852.3906 F 908.653.1717 | 800.852.4133

Spout Installation

(Refer to Figure 1 & 2)

Note: Some items have been pre-assembled at the factory to ensure quality and fit. Some disassembly may be required during installation.

1. Remove nut (12), washer (11), and tee assembly (14) from spout mounting nipple (13). *Note: once disassembled, the spout base, escutcheon, and retaining pins may be loose.
2. Carefully put spout down on back, on a clean surface.
3. Remove escutcheon and retaining pins and place a dab of silicone on tips of retaining pins and put back into allotted slots in spout base.
4. Put escutcheon back on.
5. Place spout through top hole of sink basin or countertop, while holding top of spout.
6. Place lift rod (3) through top of spout.
7. Slide washer (11) onto spout with cut out towards back of spout, allowing for lift rod (3) to slip down.
8. Thread nut (12) onto spout nipple and secure to sink basin or countertop in desired position.
9. Screw tee (15) onto end of spout nipple (14) using NSF listed joint compound. *Note: tee (15) outlet ports should be at 9 & 3 o'clock
10. Connect hot and cold hoses (10) to tee assembly (14) and valve bodies (6 & 7).

FIGURE 1

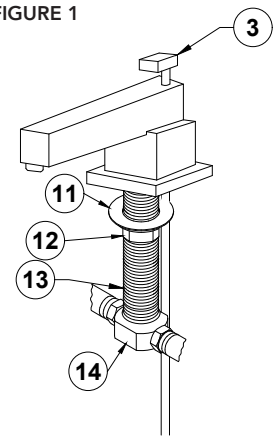

FIGURE 2

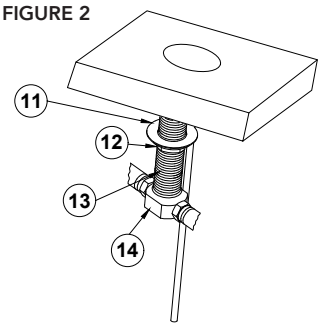

Valve Installation

(Refer to Figure 3, 4, & 5)

1. Identify hot and cold valve. Hot has a red sticker and cold has a blue sticker.
2. Install hot valve on left side of spout as you are facing the sink.
3. Remove handle (4), escutcheon (5), top nut (12).
4. Discard top nut.
5. Lower under counter valve body nut (8) to lowest position.
6. Place valve body (6 or 7) through deck. Loosely affix escutcheon (5) on valve all the way down.
7. Place handle (4) on stem testing on/off position. Tighten set screw on handle.
   *Note: out ports of both hot & cold valve bodies should be facing spout.
8. Bring escutucheon (5) up close to but not touching handle (4).
   *Note: use silicone under escutcheon for water tight seal at discretion of the installer.

FIGURE 3

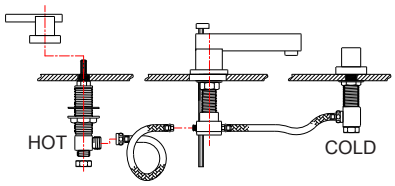

FIGURE 4

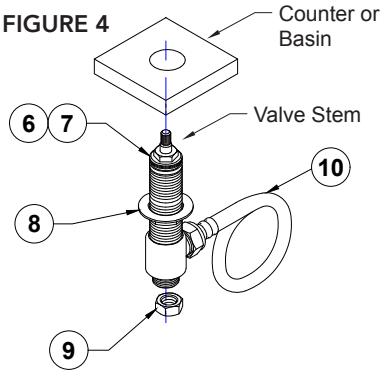

Hose Installation

1. Connect hot hose to hot valve outlet and "T". **Figure 3**.
2. Connect cold hose to cold valve outlet and "T". **Figure 3**.
3. Connect supply hoses or tubes (not supplied) to base of hot and cold valves. **Figure 4**.

Aerator Cleaning

ALWAYS REMOVE AERATOR AND FLUSH THE FAUCET AFTER INITIAL INSTALLATION

1. Use aerator key supplied with faucet
2. Engage key in aerator. **Figure 1**.
3. Remove aerator by turning key counterclockwise
4. Turn on hot and cold water valves flush lines
5. Reinstall aerator by engaging key and turning clockwise until tight
6. Check for leaks, re-tighten if necessary

Aerator Key

FIGURE 1

FIGURE 5

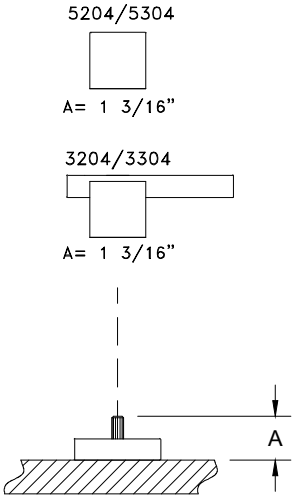

Handle Installation

1. Install handle onto stem in desired "off" position.
2. Confirm handle is not binding with escutcheon. Adjust valve nuts and escutcheon if necessary.
3. Handles are fastened with a set screw or top screw. **Figure 6**.
4. If set screw type, install washer and screw, tighten then press in decorative cap with o-ring.
5. If top screw type, install washer and screw, tighten then press in decorative cap with o-ring.

FIGURE 6

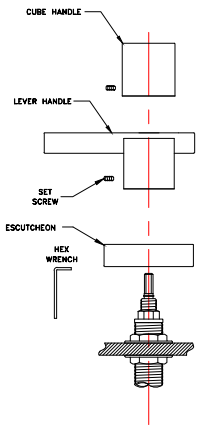

Drain Assembly

1. Disassemble top flange (2) and drain stopper (1) from pop-up drain body (6).
2. Loosen mounting nut (5) for desired height. *Note: This may vary depending on thickness of sink basin or countertop.*
3. Apply appropiate silicon/putty under lip of top flange (2).
4. From underneath, insert drain body (6) through sink basin or countertop and attach top flange (2).
5. Guide sink gasket (3) & plastic washer (4) up snug to bottom of sink basin or countertop.
6. Test the length needed for drain stopper (1) by adjusting height of eyelet so it is visible from side port of ball rod.
7. Align top flange (2) & drain body (6) & tighten nut (5) securely.
8. Test alignment using ball rod (10) without ball rod seats (8) to ensure it goes through eyelet of drain stopper (1).
9. Adjust length of drain stopper (1) (if required) by loosening the nut & eyelet to desired height. Then secure back up to bottom of drain stopper (1).
10. Put one ball rod seat (8) before ball in ball rod (10) concave side toward ball. Push through side port making sure the ball rod (10) goes through drain stopper (1) eyelet. Put second seat (8) on+to other side of ball rod (10) & attach ball rod nut (9). Do not over tighten.
11. Pushing ball rod (10) down to raise drain stopper (1) in sink. Test & adjust if necessary.
12. Attach lift rod strap (11) to pop-up rod.
13. Push down on ball rod (10) putting one end of spring clip (12) on, then put through appropiate hole in lift rod strap (11). Attach other end of spring clip (12) & test.
14. Attach tailpiece (7) to drain body (6) using pipe thread sealing tape on threads.

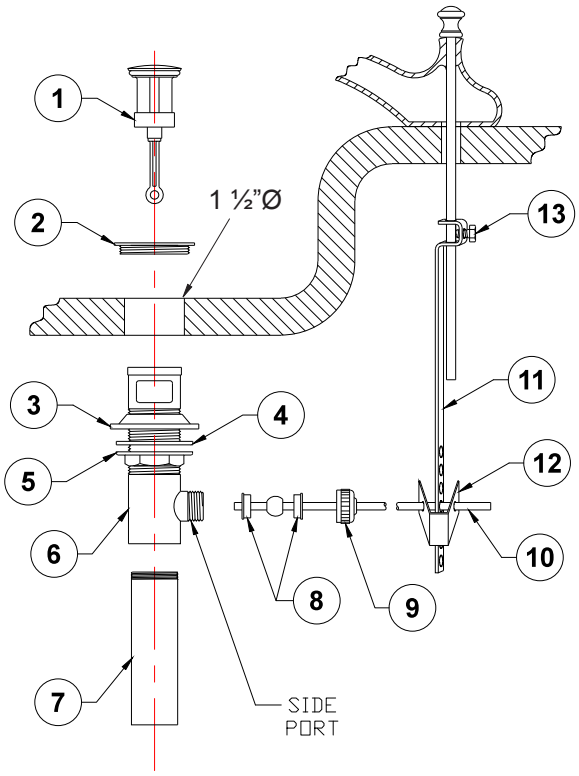

COMPONENT PARTS	
1	Drain Stopper
2	Top Flange
3	Sink Gasket
4	Plastic Washer
5	Mounting Nut
6	Drain Body
7	Tailpiece
8	Ball Rod Seat
9	Ball Rod Nut
10	Ball Rod
11	Lift Rod Strap
12	Spring Clip
13	Lift Rod Strap Screw

JACLO INDUSTRIES | 129 Dermody Street Cranford, NJ 07016
P 908.653.4433 | 800.852.3906 F 908.653.1717 | 800.852.4133

To learn more about JACLO's warranty, please visit **jaclo.com**