Compression Fitting Installation

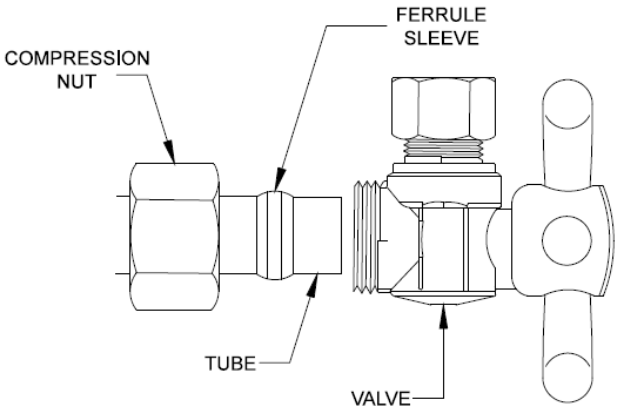

Read Instructions Carefully Prior to Install.

1. Shut off water supply.
2. Check tubing for dents, bends, putty or burrs and make sure it is cut square. Fix/cut accordingly.
3. Place new compression nut on the pipe (threads facing valve), then the ferrule sleeve.
4. Slide valve on to the pipe until it bottoms out such that the tube is seated all the way into the fitting. **DO NOT USE SEALANT/PUTTY/PIPE DOPE/TAPE. Usage of these materials will result in a leak or valve failure.**

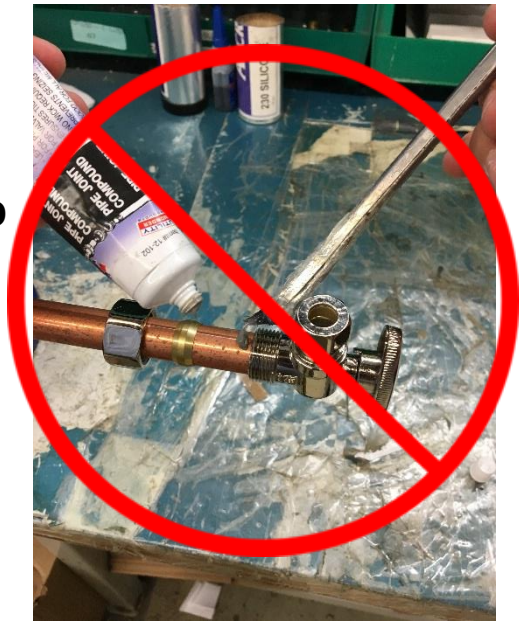

5. Slide the sleeve back until it is touching the valve, then bring the nut over top of it. Again, ensure the supply pipe remains seated and square to the fitting.
6. Hand tighten the nut onto the supply port making sure it is threading on smoothly.
7. Stabilize the valve and tighten nut 1/2 of a turn. **DO NOT OVERTIGHTEN. Overtightening can lead to failure and leaking long after installation.**
8. Attach tubing/hose to other end of the valve, turn on water supply and check for leaks. If a leak occurs, turn the water off and tighten appropriate nut in quarter turn increments until leak has subsided. **Do not exceed 3/4 more turns or damage is possible.** If leak still remains, it is necessary to take back off compression nut and ferrule sleeve and inspect the pipe for signs that could cause an improper seal (burrs, nicks, bends, etc.).

(See installation pictures on next page for assistance)

1

2

3

4

5

To learn more about JACLO's warranty, please visit **jaclo.com**