INSTALLATION INSTRUCTIONS

# Luxury Grab Bars
## Straight, 90°, Inverted "T", Inside Corner

JACLO®
Confidence from start to finish.®

STRAIGHT GRAB BAR

90° GRAB BAR

INVERTED "T" GRAB BAR

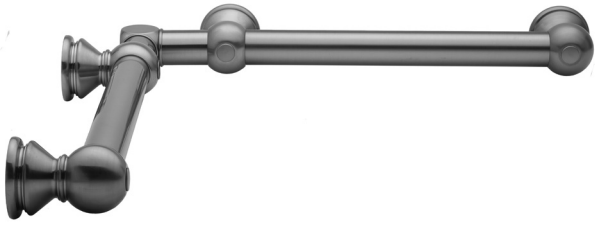

INSIDE CORNER GRAB BAR



**JACLO INDUSTRIES** | 129 Dermody Street Cranford, NJ 07016
**P** 908.653.4433 | 800.852.3906 **F** 908.653.1717 | 800.852.4133

**Important Information:**

1 › Our 1-1/4" grab bars have been designed and tested to meet or exceed the standards required for CABO/ANSI 117.1. They have been designed to be attached to a wall using the encloded #14 x 3" long stainless steel screws into a wood stud or 1" plywood adequately supported by metal or wood studs. It is the responsibility of the installer (builder or architect) to insure that the correct hardware is used and that the wall construction is adequate. Any other fasteners may not meet CABO/ANSI 117.1 standards.

2 › 1" personal bars do not meet CABO/ANSI 117.1 standards and are used only at the risk of the installer. We assume no responsibility for improper installation or use of an improper grab bar for the location.

3 › Styles will vary, pictures are for reference only.

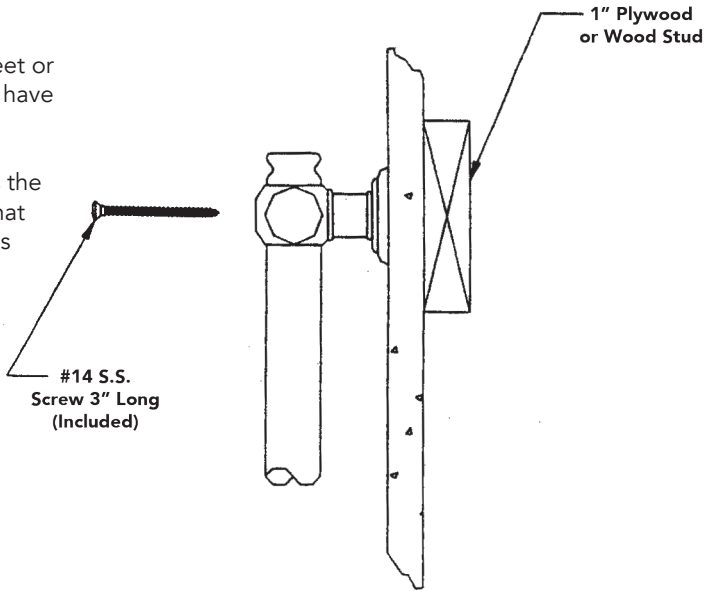


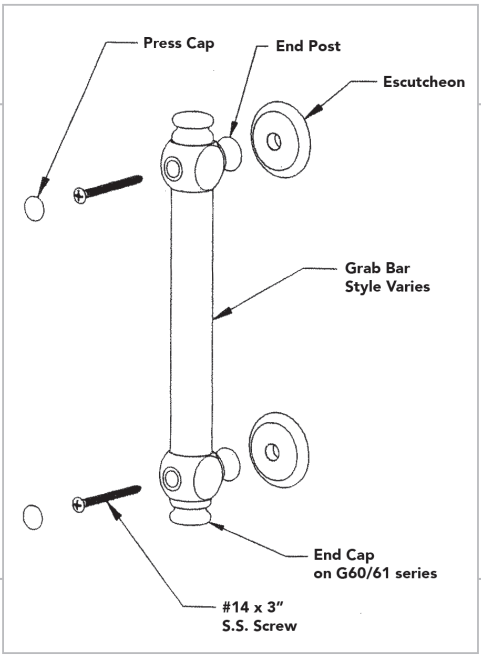


**Installation Instructions for Straight Bars:**

1 › Mark center of holes for mounting screws.

2 › Drill 1/8" diameter holes.

3 › Place escutcheon on post hubs and place on wall. Drive #14 x 3" screw into 1" plywood or wood stud, DO NOT TIGHTEN.
**Note:** Soap applied to screw threads will reduce the power required.

4 › Repeat for other side.

5 › Make sure grab bar is aligned properly, then tighten all screws.

6 › Install press caps.

7 › Install handshower if supplied.

**Installation Instructions for Inside Corner Grab Bars:**

1 › Mark center of holes for mounting screws on the two post hubs closest to the corner.

2 › Drill 1/8" diameter holes.

3 › Place escutcheon on the two post hubs closet to the corner.
Drive #14 x 3" screw into 1" plywood or wood stud, DO NOT TIGHTEN.
**Note:** Soap applied to screw threads will reduce the power required.

4 › Place escutcheon on the other post hubs. Level bar, drill holes and install screws.

5 › Make sure grab bar is aligned properly, then all srews.

6 › Install press caps.

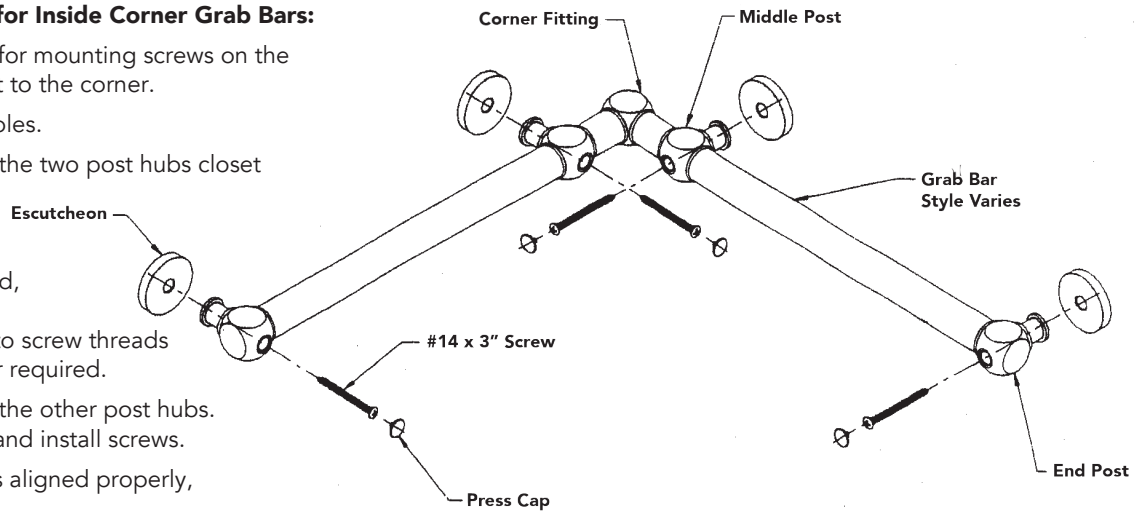




JACLO INDUSTRIES | 129 Dermody Street Cranford, NJ 07016
P 908.653.4433 | 800.852.3906 F 908.653.1717 | 800.852.4133

**Installation Instructions for Angular / Inverter "T" Grab Bars:**

1 › Mark center of holes for mounting screws.

2 › Drill 1/8" diameter holes.

3 › Place escutcheon on post hubs and place on wall. Drive #14 x 3" screw into 1" plywood or wood stud, DO NOT TIGHTEN. Note: Soap applied to screw threads will reduce the power required.

4 › Repeat for other side.

5 › Make sure grab bar is aligned properly, then tighten all srews.

6 › Install press caps.

7 › Install handshower if supplied.

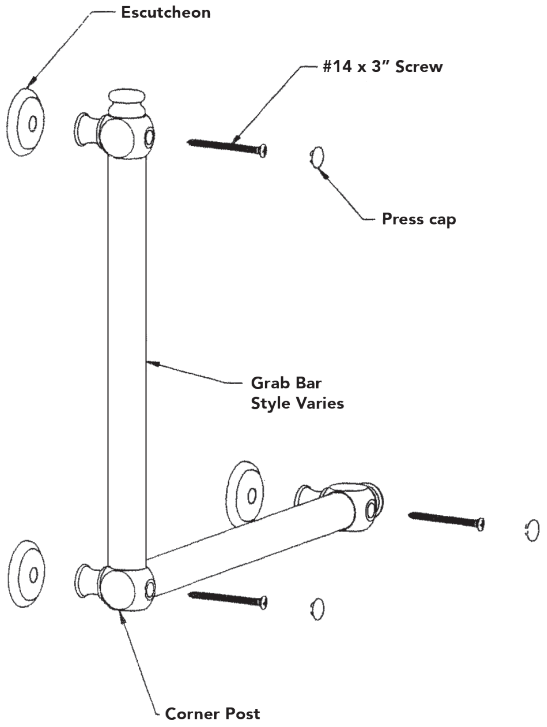




**JACLO INDUSTRIES** | 129 Dermody Street Cranford, NJ 07016
**P** 908.653.4433 | 800.852.3906 **F** 908.653.1717 | 800.852.4133

To learn more about JACLO's warranty, please visit **jaclo.com**