Cranford Faucet with Majesty Lever Handles

Model #: 5460-T694-

JACLO
Confidence from start to finish.™

FEATURES:

- All brass 8" - 12" widespread faucet includes brass pop-up drain with overflow
- 1/4 turn ceramic valves
- Stationary Spout
- Available Flow Rates: 1.5, 1.2 & 0.5 GPM. Additional flow rate (aerator) options available. Contact JACLO.
- 5 1/2" spout reach center to center
- Spout Hole Size Min-Max: 1 1/4" - 1 3/4"
- Valve Hole Size Min-Max: 1 1/8" - 1 5/8"
- For additional drain options refer to lavatory drain section or visit jaclo.com
- Not available in ULB

AVAILABLE FINISHES:

Polished Chrome (PCH)	Satin Chrome (SC)	Bronze Umber (BU)
Satin Nickel (SN)	Pewter (PEW)	Caramel Bronze (CB)
Polished Nickel (PN)	Antique Brass (AB)	Antique Copper (ACU)
Oil-Rubbed Bronze (ORB)	Polished Brass (PB)	Polished Copper (PCU)
Vintage Bronze (VB)	Satin Brass (SB)	Matte Black (MBK)
Satin Gold (SG)	Polished Gold (PG)	Black Nickel (BKN)
White (WH)	Satin Cooper (SCU)	Almond (ALD)
Amber (AMB)	Azure Blue (AZB)	Coral (COR)
Mint Green (GRN)	Stone Grey (GRY)	Lilac (LAC)
Light Blue (LBL)	Limon (LIM)	Plum (PLM)
Pink (PNK)	Red (RED)	Graphite (GPH)
Aged Unlacquered Brass (AUB)		

SPECIFICATION DRAWING:

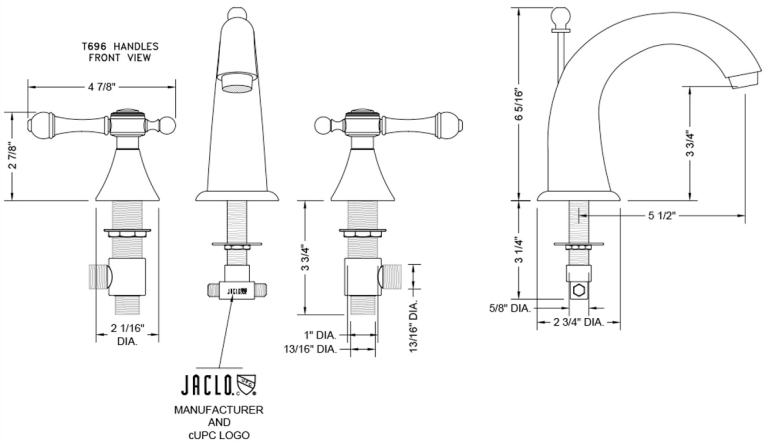

AVAILABLE HANDLES:

T646 T647 T677 T694