Uptown Contempo Single Hole Faucet with Push Top Drain

JACLO
Confidence from start to finish.™

Model #: 6677-812-

Faucet can be right hand mounted or left hand mounted

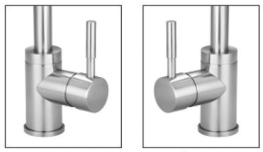

Right Hand | Left Hand

FEATURES:

- Single lever faucet
- Includes 812- 'finger touch" plug drain
- ADA compliant
- All brass body, ceramic cartridge
- Stationary Spout
- Stainless steel flex supplies included with $^{3}/_{8}$" O.D. female ends
- Spout Hole Size: 1 $^{3}/_{8}$" - 1 $^{5}/_{8}$"
- Available Flow Rates: 1.5, 1.2, & 0.5 GPM. Additional flow rate (aerator) options available. Contact JACLO

AVAILABLE FINISHES:

Polished Chrome (PCH)	Satin Chrome (SC)	Bronze Umber (BU)
Satin Nickel (SN)	Pewter (PEW)	Caramel Bronze (CB)
Polished Nickel (PN)	Antique Brass (AB)	Antique Copper (ACU)
Oil-Rubbed Bronze (ORB)	Polished Brass (PB)	Polished Copper (PCU)
Vintage Bronze (VB)	Satin Brass (SB)	Matte Black (MBK)
Satin Gold (SG)	Polished Gold (PG)	Black Nickel (BKN)
White (WH)	Satin Cooper (SCU)	Almond (ALD)
Amber (AMB)	Azure Blue (AZB)	Coral (COR)
Mint Green (GRN)	Stone Grey (GRY)	Lilac (LAC)
Light Blue (LBL)	Limon (LIM)	Plum (PLM)
Pink (PNK)	Red (RED)	Graphite (GPH)
Aged Unlacquered Brass (AUB)		
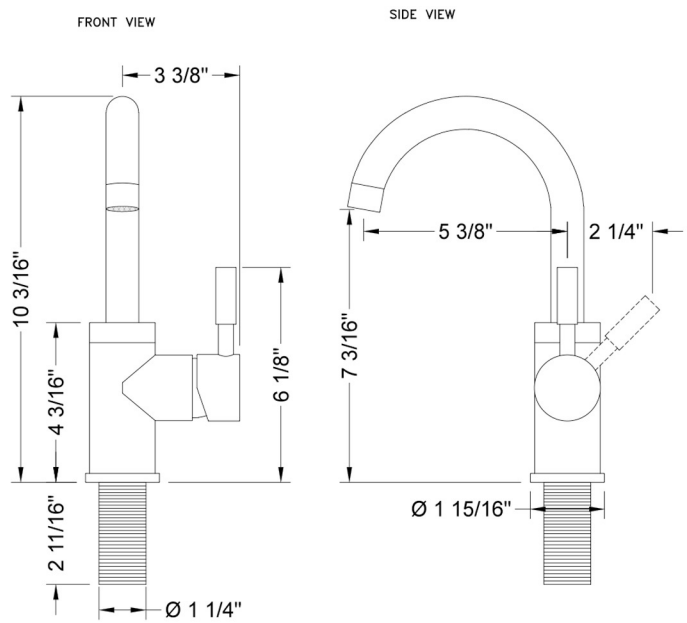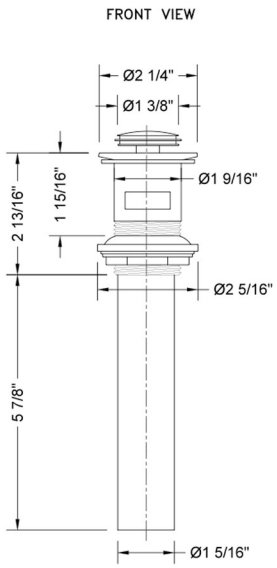
SPECIFICATION DRAWING: